POWER LEAD CONFIGURATION

Size :- 20 AWG
Red :- + ve
Black :- - ve

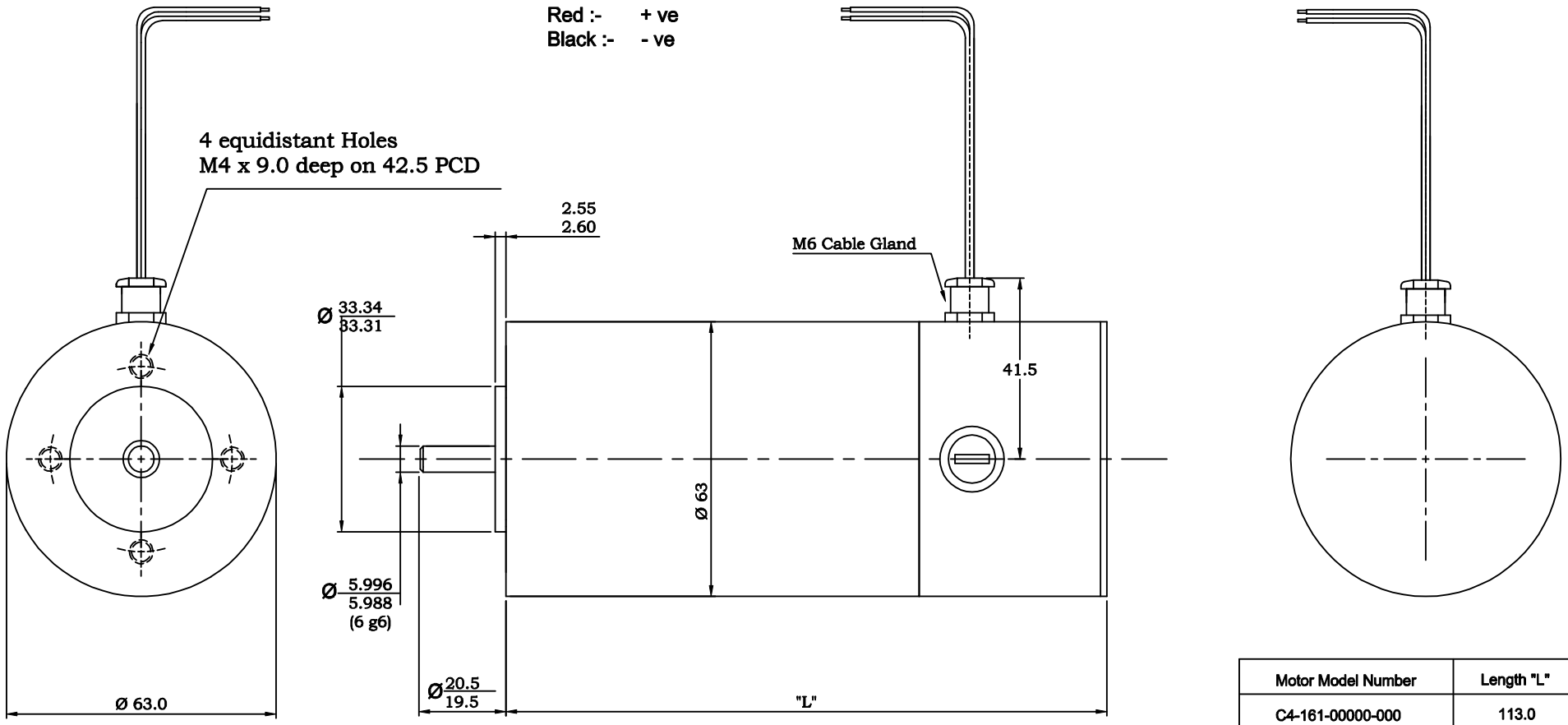

Motor Model Number	Length "L"
C4-161-00000-000	113.0
C4-162-00000-000	140.5

Notes:

1. Clockwise rotation as viewed from output shaft with positive voltage applied to red lead with respect to black lead.

2. All dimensions in mm.

					Tolerances. X.X = ± 0.3 mm X.XX = ± 0.1 mm Ang. Dim. = ± 1°		
						Date	Name
					Drawn	22/6/06	POB
					App'd		
Issue	ECO. No.	Date	Name	App'd	Norm		

Scale : NTS

Weight :

Material :

Remove all burrs and sharp corners

Rare Earth Motor , C4-16X

C4-16X-00000-000

Sheet 1 of 1

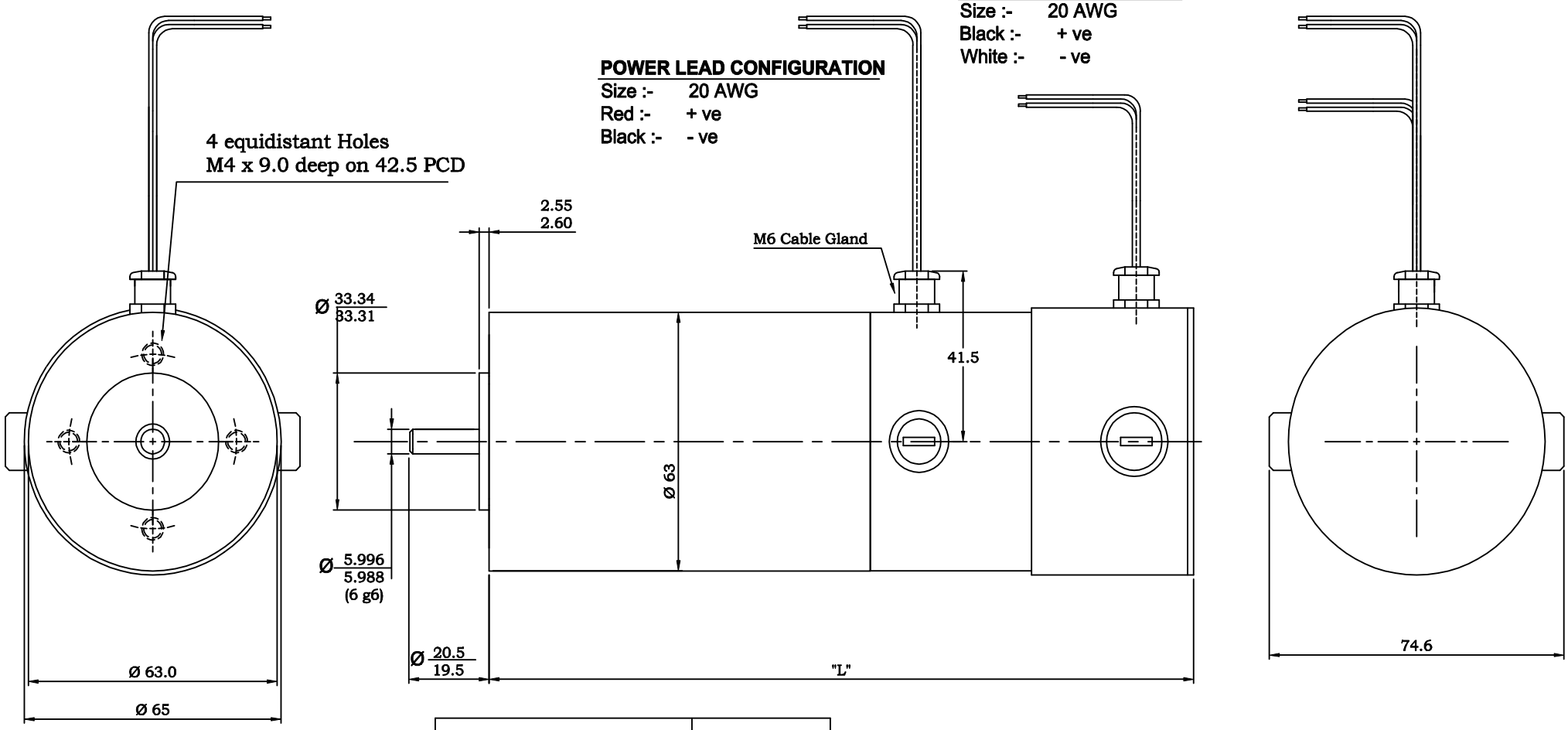

Motor Model Number	Length "L"
C4-161x-00001-000	151
C4-162x-00001-000	179

Notes:

1. Clockwise rotation as viewed from output shaft with positive voltage applied to red lead with respect to black lead.
   With this rotation, a positive voltage is generated on black lead of tacho with respect to white lead.

2. All dimensions in mm.

					Tolerances. X.X = ± 0.3 mm X.XX = ± 0.1 mm Ang. Dim. = ± 1°		
						Date	Name
					Drawn	22/3/07	POB
2	0297	15/12/08	POB		App'd		
Issue	ECO. No.	Date	Name	App'd	Norm		

Scale : NTS

Weight :

Material :

Remove all burrs and sharp corners

Rare Earth Motor , C4-16X

C4-16X-00001-000

Sheet 1 of 1

POWER LEAD CONFIGURATION

Size :- 20 AWG
Red :- + ve
Black :- - ve

ENCODER CONN. PINOUT

Pin 1 :- GND
Pin 2 :- Index
Pin 3 :- CH A
Pin 4 :- +5V
Pin 5 :- Ch B
1024 ppr.

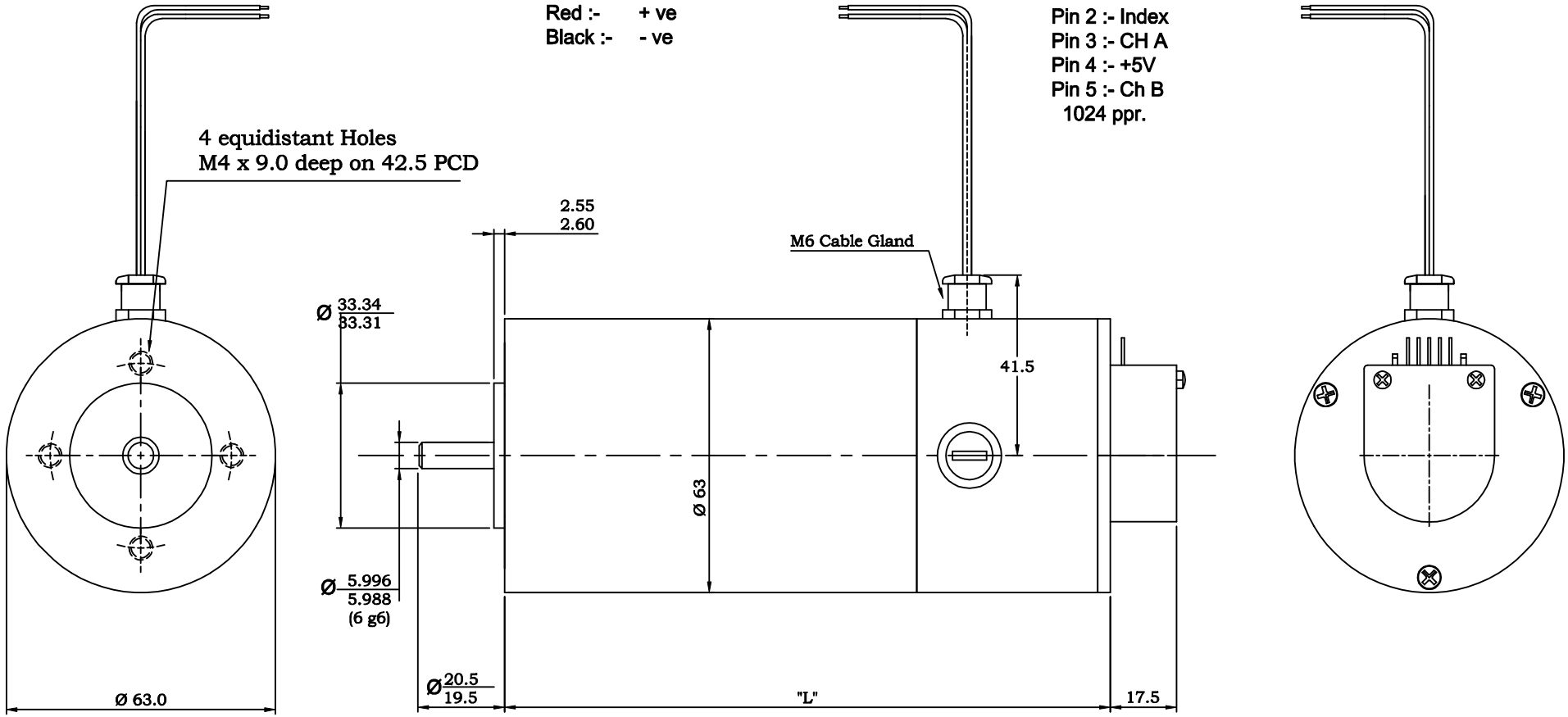

Motor Model Number	Length "L"
C4-161-0000F-000	114.5
C4-162-0000F-000	142.0

Notes:

1. Clockwise rotation as viewed from output shaft with positive voltage applied to red lead with respect to black lead.
   With this rotation, encoder channel A leads encoder channel B by 90° elec.

2. All dimensions in mm.

3. Encoder, 2 channel (A quad B) & index TTL output, accepts locking shell (AMP #87175-2) & 5 pins (AMP# 87165-1)

Issue	ECO. No.	Date	Name	App'd

		Date	Name
Drawn		10/10/08	POB
App'd			
Norm			

Tolerances.
X.X = ± 0.3 mm
X.XX = ± 0.1 mm
Ang. Dim. = ± 1°

Scale : NTS

Weight :

Material :

Remove all burrs and sharp corners

Rare Earth Motor, C4-16X
Single Ended Modular Encoder

C4-16X-0000F-000

Sheet 1 of 1

POWER LEAD CONFIGURATION

Red :- + ve
Black :- - ve

ENCODER PINOUT

Pin 1 :-	Ground	Pin 6 :-	Ch A+
Pin 2 :-	Ground	Pin 7 :-	+5 V DC
Pin 3 :-	Index -	Pin 8 :-	+5 V DC
Pin 4 :-	Index +	Pin 9 :-	Ch B-
Pin 5 :-	Ch A-	Pin 10:-	Ch. B+

Output:- Differential Line Driver (26C31)
Accepts Amp Connector Shell (AMP# 102537-3) with back cover (AMP# 102536-3) & pins (AMP# 102694-3) x10

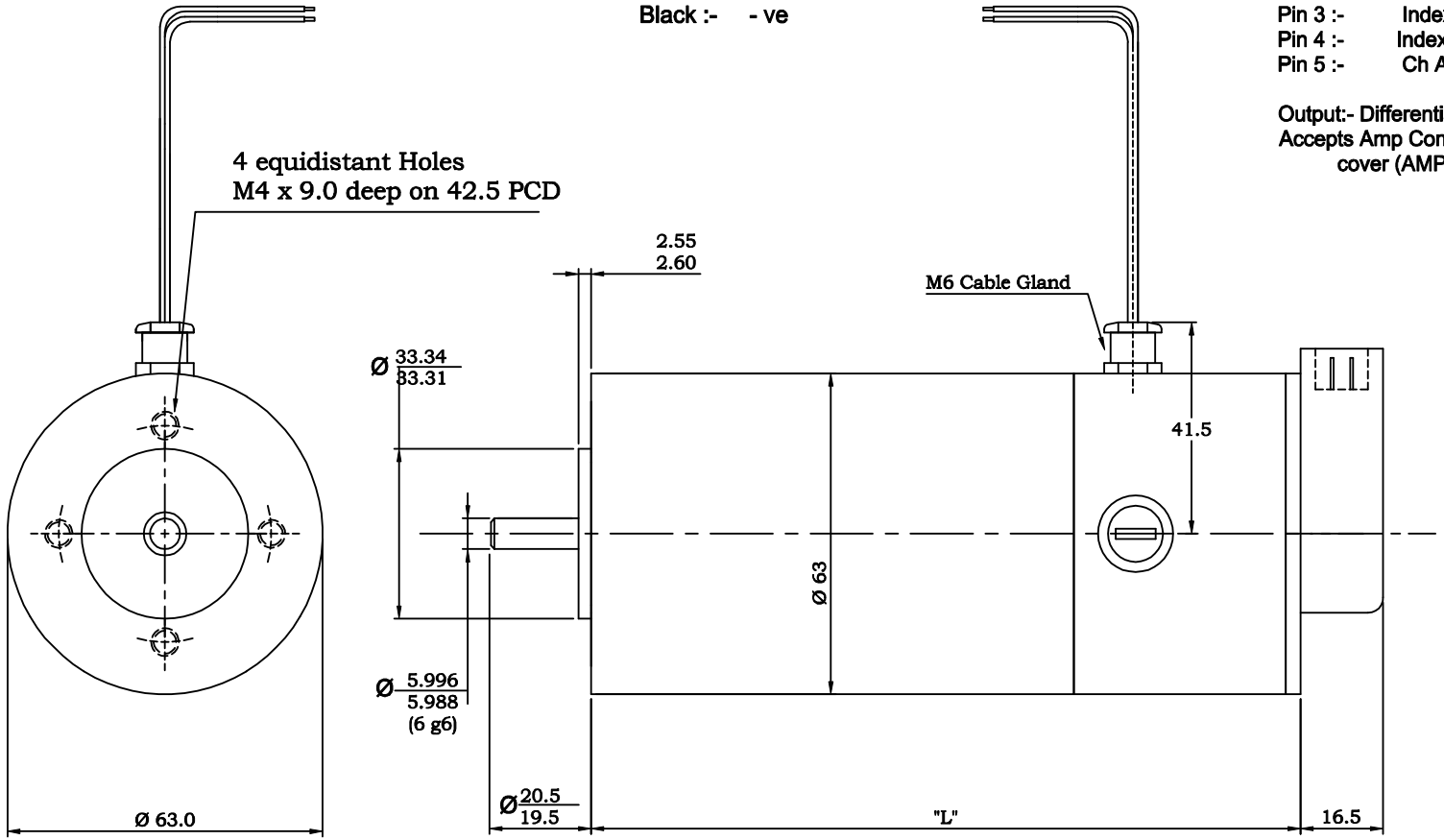

Motor Model Number	Length "L"
C4-161x-0000N-000	114.5
C4-162x-0000N-000	142.0

Notes:

1. Clockwise rotation as viewed from output shaft with positive voltage applied to red lead with respect to black lead.
   With this rotation, encoder channel B leads encoder channel A by 90° electrical. (512 ppr)

2. All dimensions in mm.

					Tolerances. X.X = ± 0.3 mm X.XX = ± 0.1 mm Ang. Dim. = ± 1°		
						Date	Name
					Drawn	27/8/08	POB
					App'd		
Issue	ECO. No.	Date	Name	App'd	Norm		

Scale : NTS

Weight :

Material :

Remove all burrs and sharp corners

Rare Earth Motor, C4-16X
with Differential Modular Encoder

C4-16X-0000N-000

Sheet 1 of 1

POWER LEAD CONFIGURATION

Size :-	20 AWG
Red :-	+ ve
Black :-	- ve

ENCODER LEAD CONFIGURATION

Red :-	+ 5V DC	Green :-	Ch B+
Black :-	RTN	Green/Black:-	Ch B-
Blue :-	Ch A+	Yellow :-	Ch Z+
Blue/Black :-	CH A-	Yellow/Black :-	Ch Z-

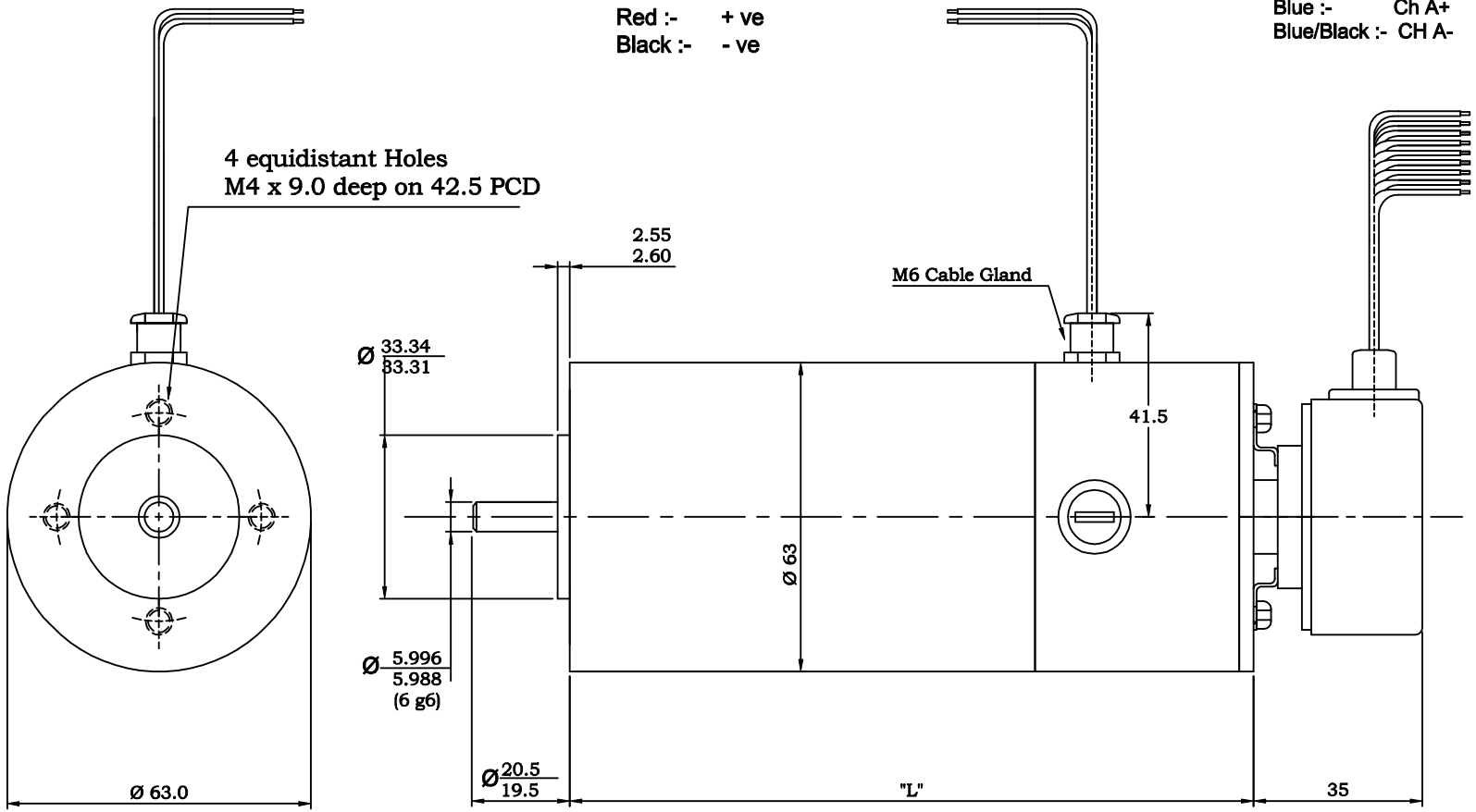

Motor Model Number	Length "L"
C4-161x-0000T-000	114.5
C4-162x-0000T-000	142.0

Notes:

1. Clockwise rotation as viewed from output shaft with positive voltage applied to red lead with respect to black lead.
   With this rotation, encoder channel B leads encoder channel A by 90° electrical. (1024 ppr)

2. All dimensions in mm.

					Tolerances. X.X = ± 0.3 mm X.XX = ± 0.1 mm Ang. Dim. = ± 1°		
						Date	Name
					Drawn	22/6/06	POB
					App'd		
Issue	ECO. No.	Date	Name	App'd	Norm		

Scale : NTS

Weight :

Material :

Remove all burrs and sharp corners

Rare Earth Motor, C4-16X with Flexmount Encoder

C4-16X-0000T-000

Sheet 1 of 1

POWER LEAD CONFIGURATION

Size :- 20 AWG
Red :- + ve
Black :- - ve

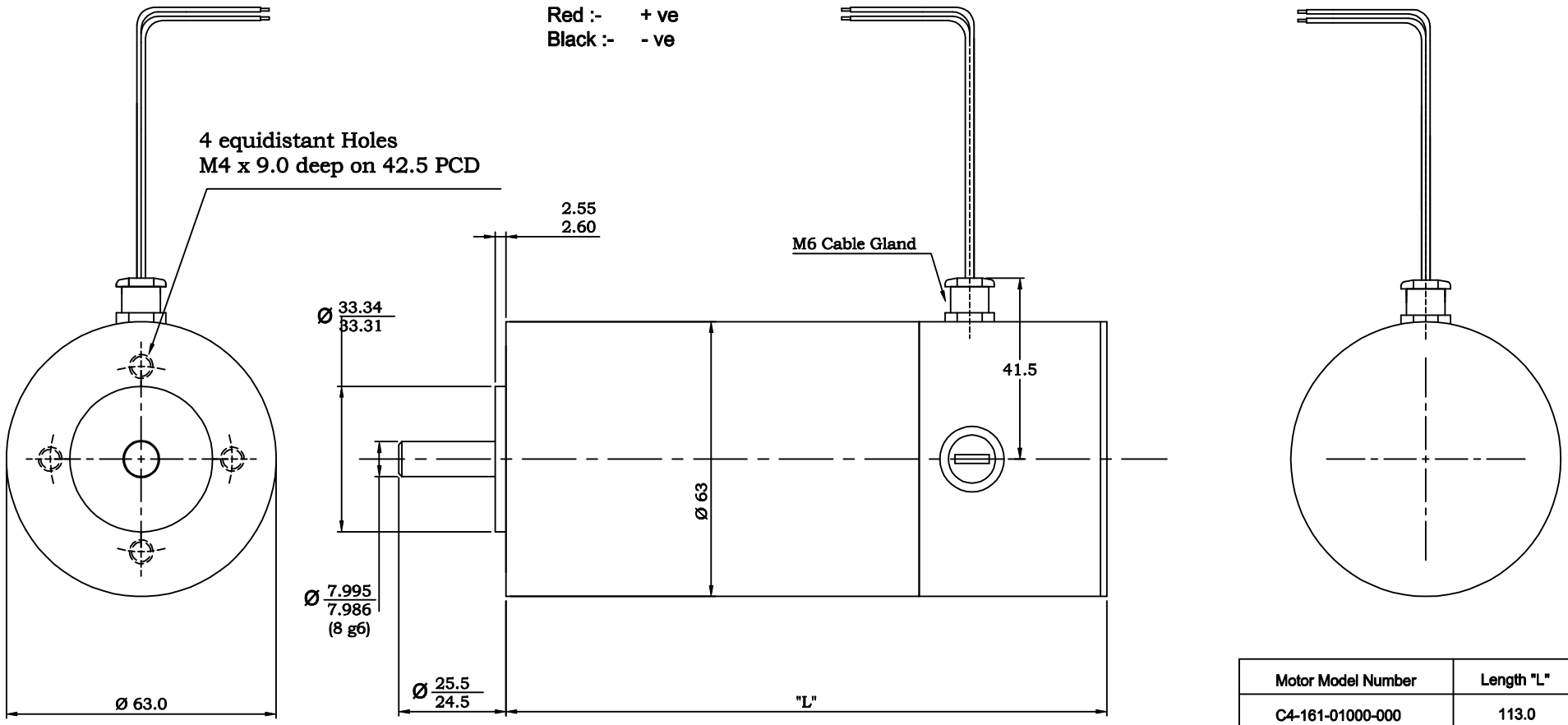

Motor Model Number	Length "L"
C4-161-01000-000	113.0
C4-162-01000-000	140.5

Notes:

1. Clockwise rotation as viewed from output shaft with positive voltage applied to red lead with respect to black lead.

2. All dimensions in mm.

					Tolerances. X.X = ± 0.3 mm X.XX = ± 0.1 mm Ang. Dim. = ± 1°		
						Date	Name
					Drawn	22/6/06	POB
					App'd		
Issue	ECO. No.	Date	Name	App'd	Norm		

Scale : NTS

Weight :

Material :

Remove all burrs and sharp corners

Rare Earth Motor , C4-16X

C4-16X-01000-000

Sheet 1 of 1

POWER LEAD CONFIGURATION

Size :- 20 AWG
Red :- + ve
Black :- - ve

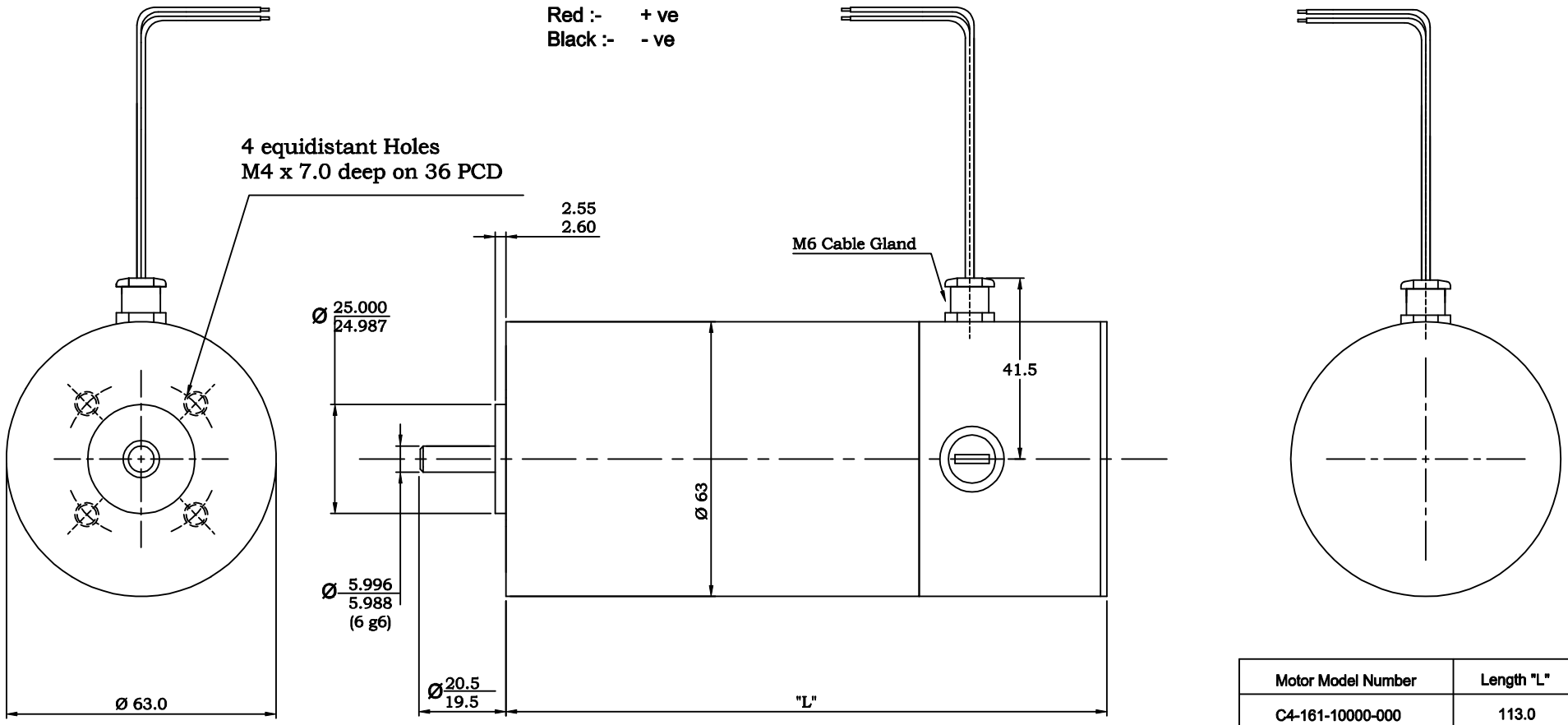

Motor Model Number	Length "L"
C4-161-10000-000	113.0
C4-162-10000-000	140.5

Notes:

1. Clockwise rotation as viewed from output shaft with positive voltage applied to red lead with respect to black lead.

2. All dimensions in mm.

					Tolerances. X.X = ± 0.3 mm X.XX = ± 0.1 mm Ang. Dim. = ± 1°		
						Date	Name
					Drawn	22/6/06	POB
					App'd		
Issue	ECO. No.	Date	Name	App'd	Norm		

Scale : NTS

Weight :

Material :

Remove all burrs and sharp corners

Rare Earth Motor , C4-16X

C4-16X-10000-000

Sheet 1 of 1

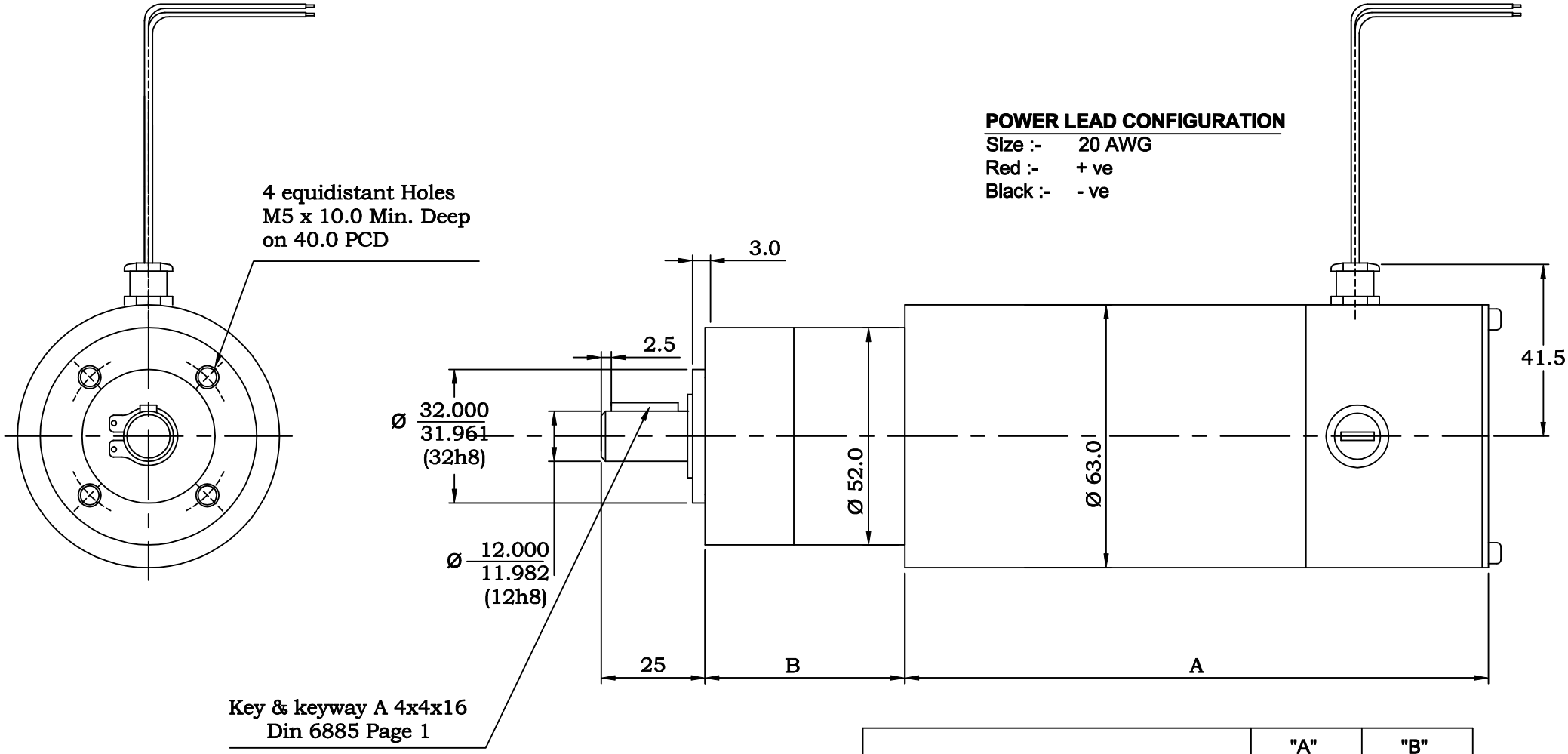

POWER LEAD CONFIGURATION

Size :- 20 AWG
Red :- + ve
Black :- - ve

	"A"	"B"
C4-161-AA000-000	113.0	48
C4-162-AA000-000	140.5	48

Notes:
1. Clockwise rotation as viewed from output shaft with positive voltage applied to red lead with respect to black lead.
2. All dimensions in mm.
3. Gearbox :- 1 stage, planetary , i = 7:1 (rounded)

Tolerances.
X.X = ± 0.3 mm
X.XX = ± 0.1 mm
Ang. Dim. = ± 1°

Issue	ECO. No.	Date	Name	App'd

	Date	Name
Drawn	29/9/06	POB
App'd		
Norm		

Scale : 1.5 : 1

Weight :

Material :

Remove all burrs and sharp corners

Gear Motor Outline
C4-16x-AA000-000

C4-16x-AA000-000

Sheet 1 of 1

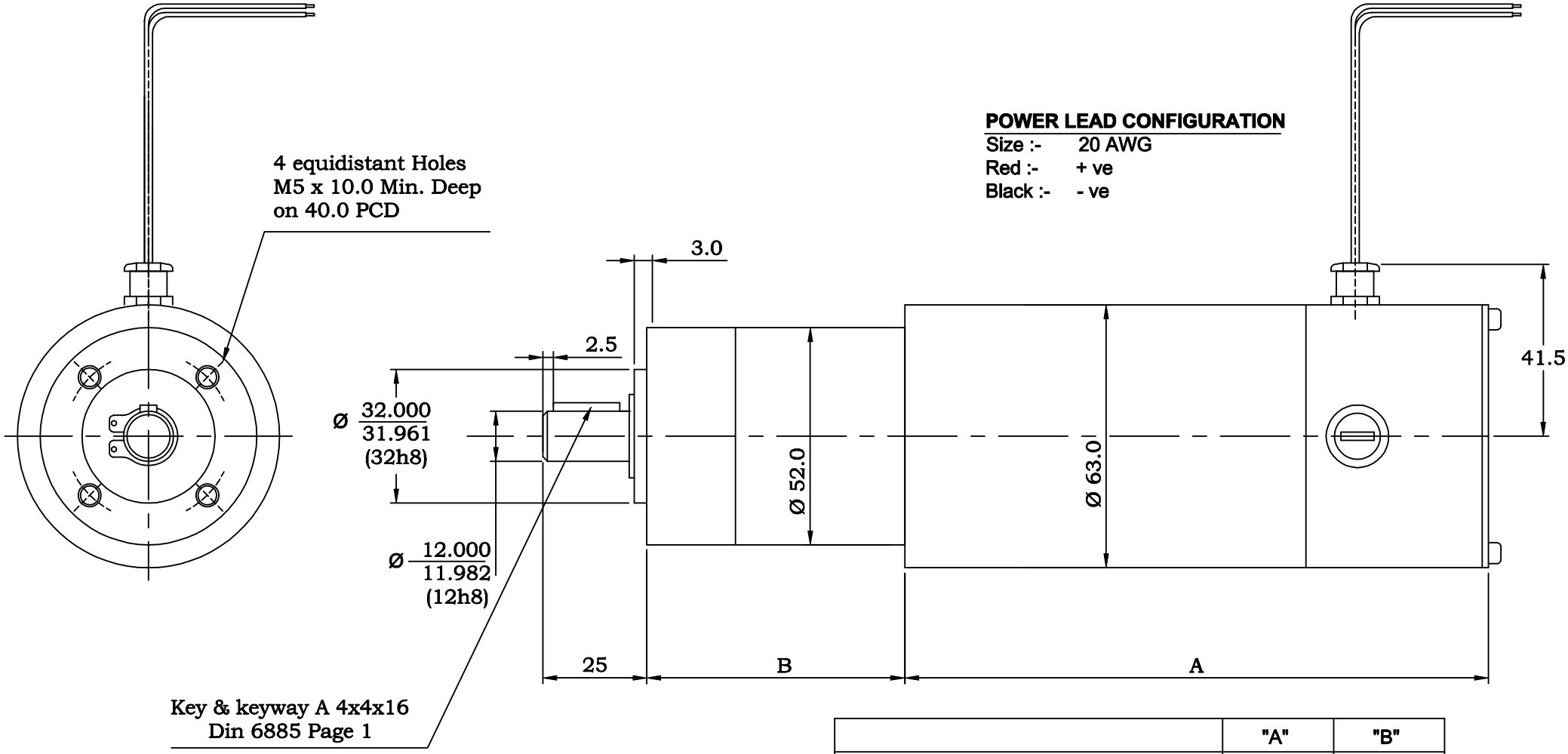

POWER LEAD CONFIGURATION

Size :- 20 AWG
Red :- + ve
Black :- - ve

	"A"	"B"
C4-161-BA000-000	113.0	62
C4-162-BA000-000	140.5	62

Notes:
1. Clockwise rotation as viewed from output shaft with positive voltage applied to red lead with respect to black lead.
2. All dimensions in mm.
3. Gearbox :- 2 stage, planetary, i = 29:1 (rounded)

Issue	ECO. No.	Date	Name	App'd

Tolerances.
X.X = ± 0.3 mm
X.XX = ± 0.1 mm
Ang. Dim. = ± 1°

	Date	Name
Drawn	29/9/06	POB
App'd		
Norm		

Scale : 1.5 : 1

Weight :

Material :

Remove all burrs and sharp corners

Gear Motor Outline
C4-16x-BA000-000

C4-16x-BA000-000

Sheet 1 of 1